Around High/ Low Table

2aroh06.02 / 2aroh06.14
2arol07.02 / 2arol07.14
2arol10.02 / 2arol10.14

Barlow Tyrie Limited - www.teak.com

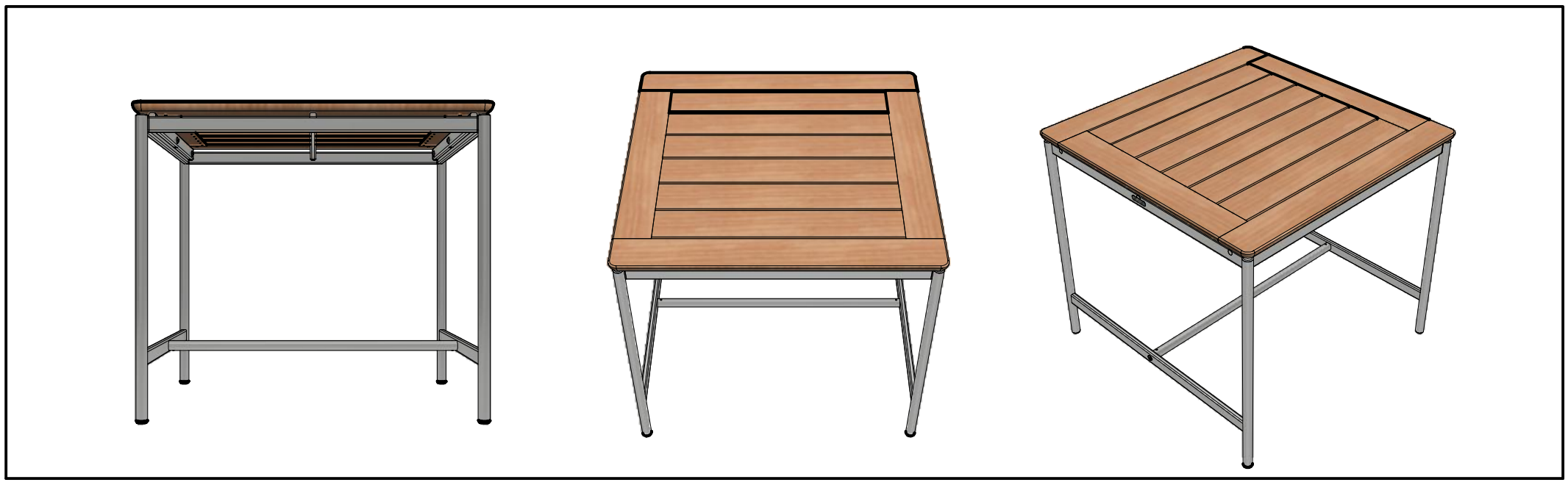

1

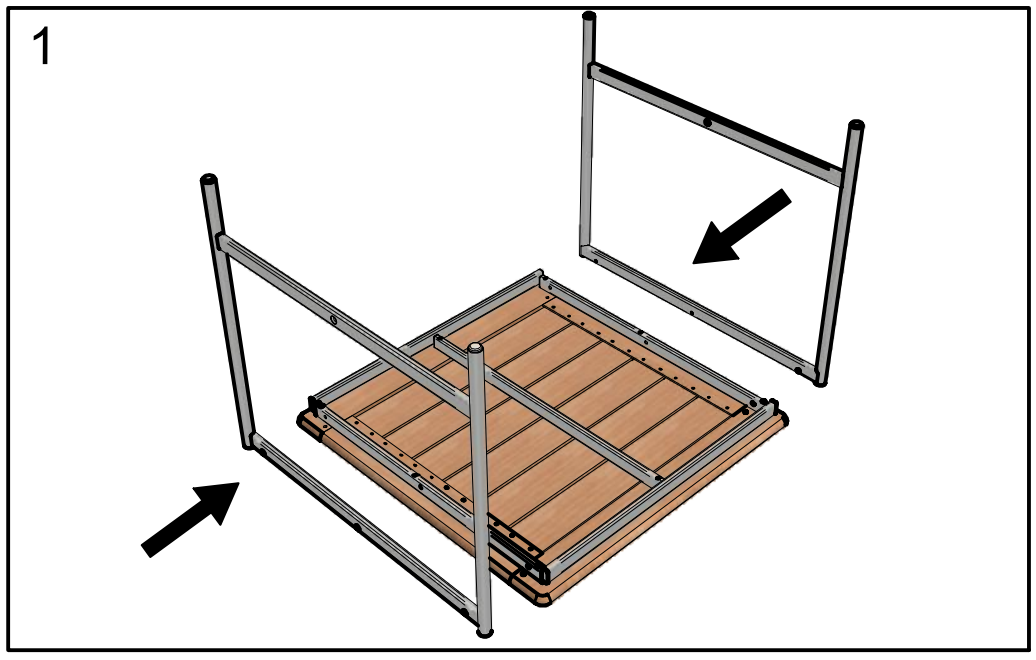

2

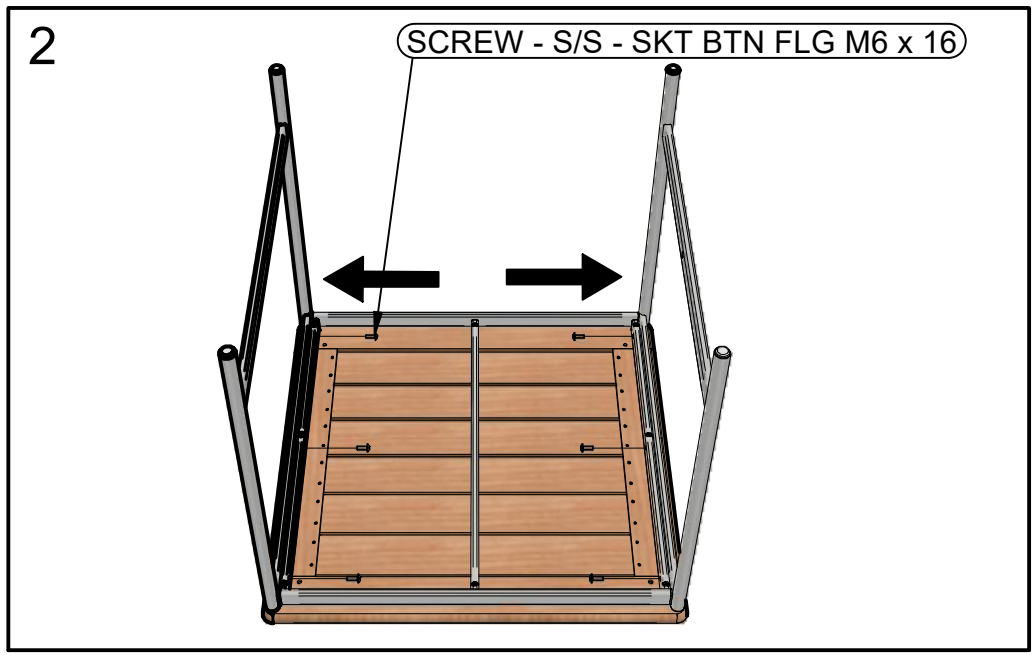

3

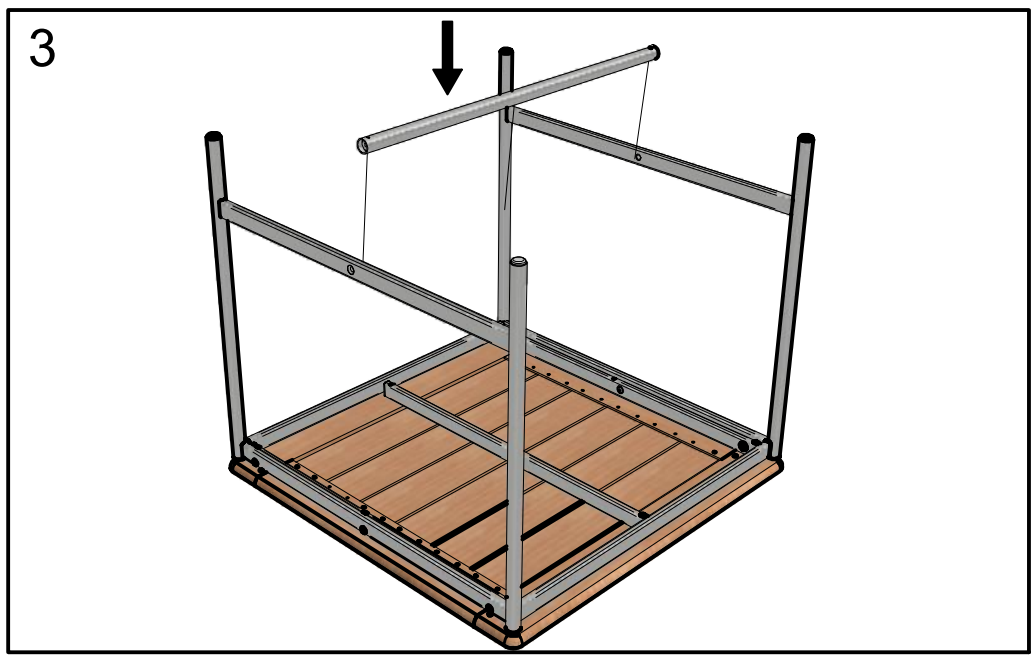

4

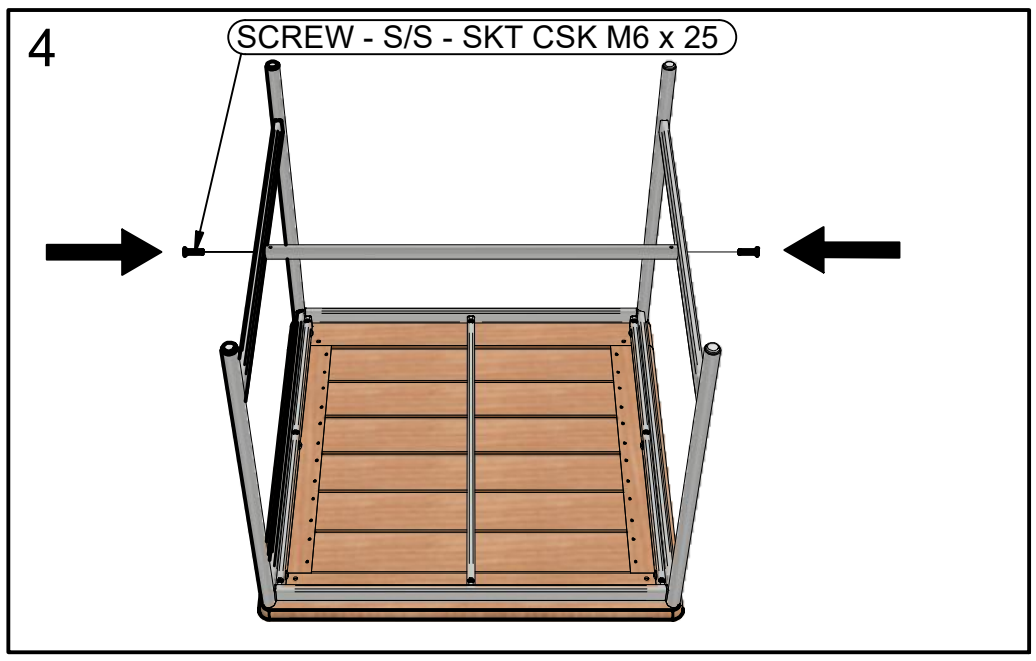

5

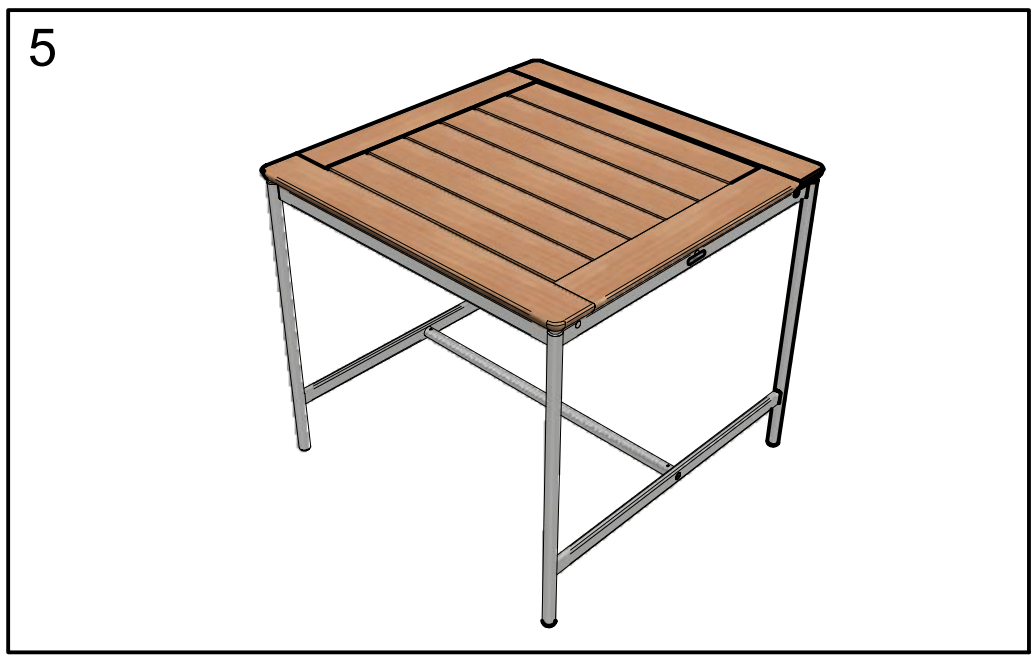

Barlow Tyrie Limited – Braintree, Essex CM7 2RN, England +44 (0)1376 557 600 – www.teak.com